KRAMER

Scan for full manual

VS-1616DN-MD Quick Start Guide

This guide helps you install and use your **VS-1616DN-MD** for the first time.

Go to **www.kramerav.com/downloads/VS-1616DN-MD** to download the latest user manual and check if firmware upgrades are available.

Step 1: Check what's in the box

- **VS-1616DN-MD** 2x2 to 16x16 Modular Multi-Format Digital Matrix Switcher
- Kramer RC-IR3 infrared remote control transmitter with batteries
- 1 Set of rack ears (attached)
- 2 Power cords
- 1 Quick start guide

Step 2: Get to know your VS-1616DN-MD

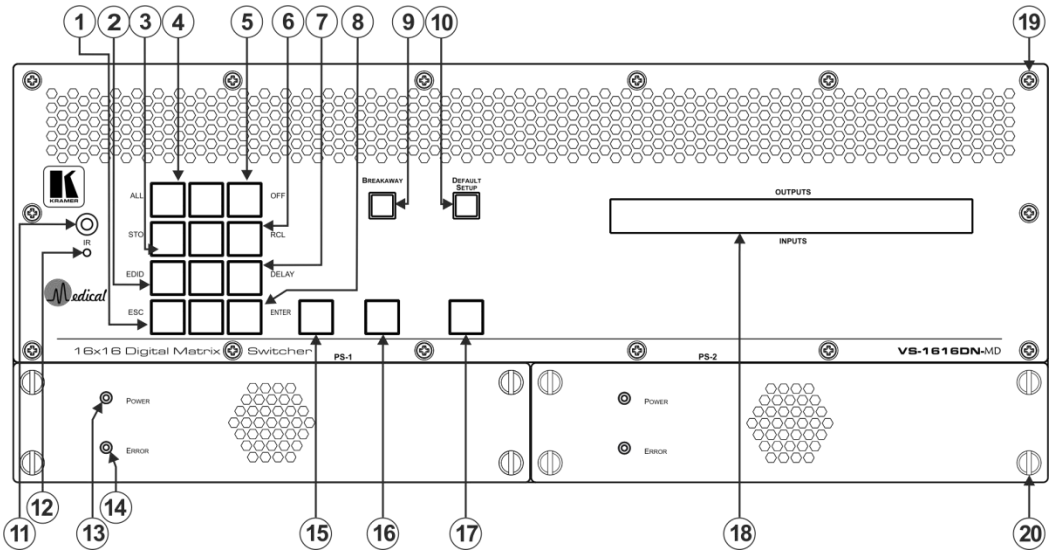

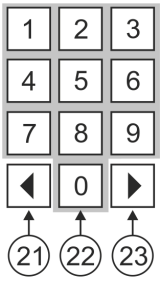

#	Feature			Function
1	Double-function Selector Buttons Area	Menu Button Functions	ESC	Press to exit the current operation.
2			EDID	Press to assign EDID channels.
3			STO	Press to store the current setup in a preset. After pressing the MENU button, this button lights and is enabled.
4			ALL	Press to connect an input to all outputs. After pressing the MENU button, this button lights and is enabled.
5			OFF	Press to turn off an output. After pressing the MENU button, this button lights and is enabled.
6			RCL	Press to recall a preset. After pressing the MENU button, this button lights and is enabled.
7			DELAY	Press to set the delay between confirming an action and the execution of the action.
8			ENTER	Press to complete the input-output setup when using a one-digit number instead of two digits. For example, to enter input 5, you can press either 05 or 5, ENTER. Press to enter the options in a setup menu.
9	BREAKAWAY Button			Press to exit a menu.
10	DEFAULT SETUP Button			Press to recall the default setup.
11	IR Receiver			Infrared remote control sensor.
12	IR LED			Lights yellow when receiving commands from the IR remote control transmitter.
13	PS-1/PS-2 POWER LED			Lights green when power supply is active. Briefly remains lit after powering off the device.

#	Feature	Function
14	PS-1/PS-2 ERROR LED	Lights red when an error is detected. Briefly lights red immediately following a power disruption (e.g., cable disconnection, power off, and so on).
15	TAKE Button	Press to confirm actions.
16	MENU Button	Press once to enable the ALL, OFF, STO and RCL buttons. Press again to enter the configuration menu. When in a Menu, press to cycle through the menu items.
17	LOCK Button	Press and hold for approximately 2 sec to lock/unlock the front panel buttons.
18	OUTPUTS/INPUTS LCD Display	Displays the outputs (upper row) switched to the selected inputs (lower row). Displays user interface messages and menus.
19	Front Panel Locking Screws	Release the 14 front panel locking screws to open the front panel and access the fan arrays.
20	Power Supply Thumbscrews	Release the 4 power supply thumbscrews to install / remove either of the **VS-1616DN-MD** power supplies. The **VS-1616DN-MD** can function normally with a single power supply.
21	◄ (Backward)	Press to shift the sliding window to the right (the LCD display only shows 13 cross-points out of a total of 16).
22	1, 2, 3, 4, 5, 6, 7, 8, 9, 0	Numeric keypad, 1 to 0.
23	► (Forward)	Press to shift the sliding window to the left (the LCD display only shows 13 cross-points out of a total of 16).

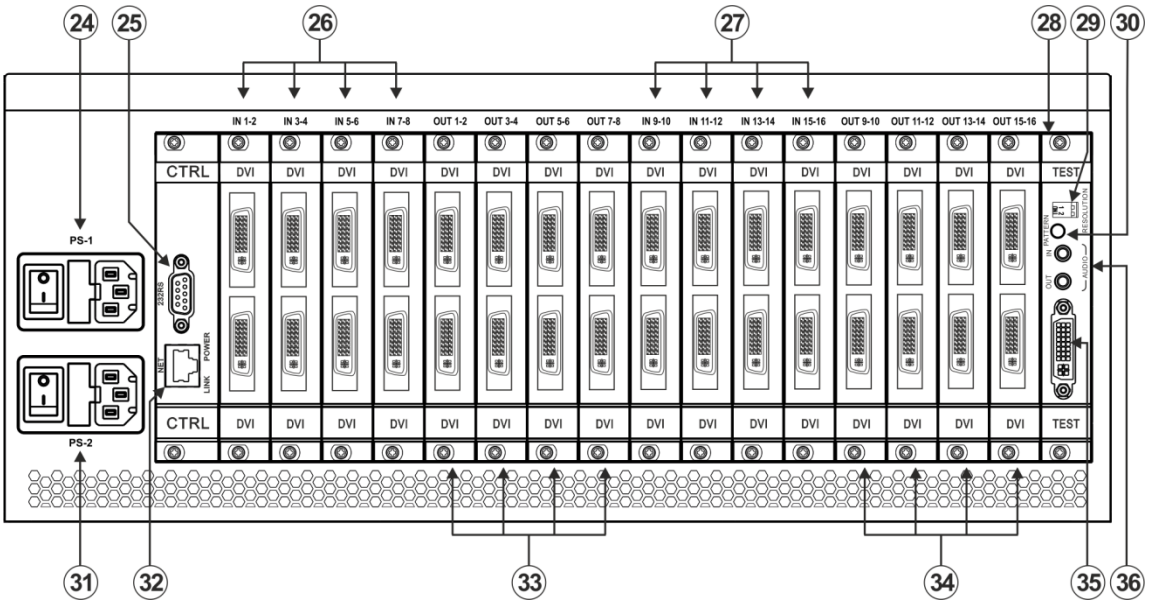

#	Feature		Function
24	PS-1 AC Mains Power Module		Power supply 1: Fuse holder and power cord socket. Connect to the AC mains supply.
25	RS-232 9-pin D-sub Port		Connects to the remote operation PC or remote controller. If the unit is not the first unit in the line, connects to the RS-232 OUT 9-pin DB port of the previous unit in the line.
26	IN 1~8 Connectors	INPUTS	Connect to the relevant video sources, depending on the cards installed (1 to 8).
27	IN 9~16 Connectors		Connect to the relevant video sources, depending on the cards installed (9 to 16).
28	TEST Module		Signal generator module for testing video and audio outputs.
29	RESOLUTION DIP-switches		Set the resolution for video generated by the Test module.
30	PATTERN Button		Press the button repeatedly to change the video pattern generated by the Test module.
31	PS-2 AC Mains Power Module		Power supply 2: Fuse holder and power cord socket. Connect to the AC mains supply.
32	NET Ethernet RJ-45 Connector		Connect to a PC or controller via the Ethernet LAN. LINK LED flashes when communication is active. POWER LED lights when the interface receives power.
33	OUT 1~8 Connectors	OUTPUTS	Connect to the relevant video acceptors, depending on the cards installed (1 to 8).
34	OUT 9~16 Connectors		Connect to the relevant video acceptors, depending on the cards installed (9 to 16).
35	Test Module DVI Molex 24-pin Video Connector		Connect to one of the relevant video inputs/outputs to aid in troubleshooting.
36	Test Module 3.5mm Mini Jack Unbalanced Analog Audio Connector		Connect to one of the relevant audio inputs/outputs to aid in troubleshooting.

Step 3: Install the VS-1616DN-MD

To rack mount the machine, the **VS-1616DN-MD** is pre-assembled with ear brackets attached to the machine.

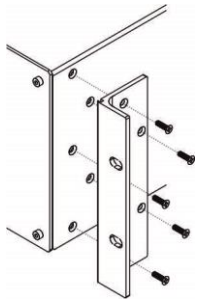

Step 4: Connect the inputs and outputs

Always switch OFF the power on each device before connecting it to your **VS-1616DN-MD**. For best results, we recommend that you always use Kramer high-performance cables to connect AV equipment to the **VS-1616DN-MD**.

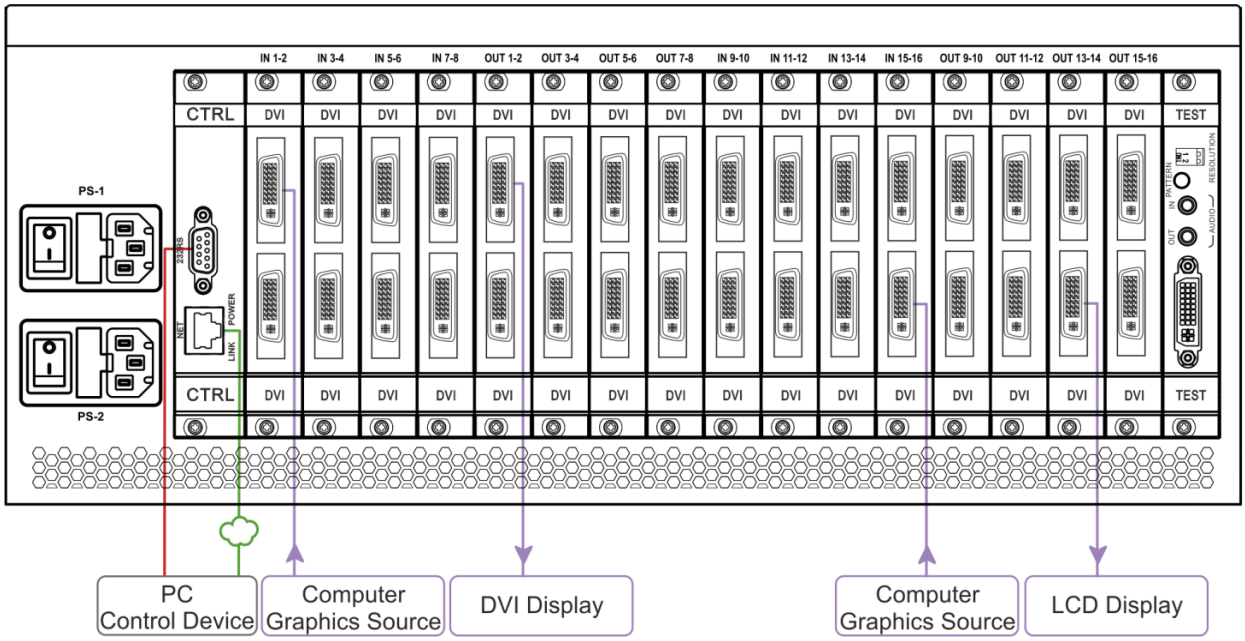

Note: the maximum number of ports may vary.

Port Numbering:

On all cards apart from the DVI dual link cards, there are two physical ports on each card and numbering of ports is sequential from top to bottom and left to right. Each DVI dual link card provides one physical port which causes the loss of one number in the numbering sequence of that card only:

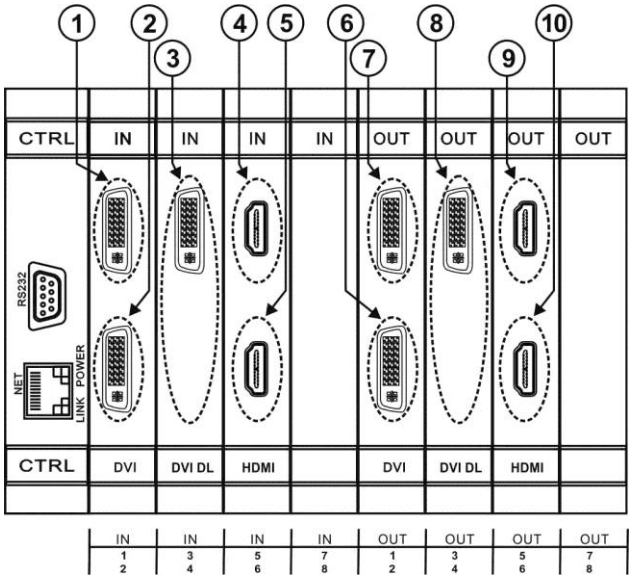

Diagram #	Actual Port #
1	IN 1
2	IN 2
3	IN 3
4	IN 5
5	IN 6
6	OUT 2
7	OUT 1
8	OUT 3
9	OUT 5
10	OUT 6

Step 5: Connect the power

Connect the two AC power cables to the rear of the **VS-1616DN-MD**, turn on both power switches and then switch on the power of connected devices.

Step 6: Set operation parameters

The **VS-1616DN-MD** does not have separate output and input buttons. Instead, the front panel includes a numeric keypad.

When the unit is powered-on, the last matrix setup that was used is loaded. Use either the setup recall (records a stored configuration from a preset) or default setup recall (for quick retrieval of a commonly used programmable default setup) functions to retrieve other setups.

The LCD display can show only 13 out of the 16 available matrix combinations at once. To view any of the matrix combinations use the ◄ or the ► buttons on the front panel to shift the sliding window to the right or left.

After switching on the power, the LCD display shows the following screens in sequence:

```
KRAMER ELECTRONICS, LTD
16 SERIES MATRIX
```

```
Load Main Setup
```

```
01 02 03 04 05 06 07 08 09 10 11 12 13
01 02 03 04 05 06 07 08 09 10 11 12 13
```

Step 7: Operate via the front panel buttons and via the:

IR remote controller:

See the **RC-IR3** user manual for information on using the remote controller.

RS-232 and Ethernet:

RS-232	
Protocol 2000/3000	
Baud Rate:	9600
Data Bits:	8
Stop Bits:	1
Parity:	None
Command Format:	HEX
P2000, to switch Input 4 to Output 2:	0x01, 0x84, 0x82, 0x81
P3000, to switch Input 4 to Output 2:	#AV 4>2
Ethernet	
IP Address:	192.168.1.39
TCP Port #:	5000
UDP Port #:	50000
Full Factory Reset	
Front Panel	Press MENU twice. Select Total Matrix Reset > Factory Reset. Press TAKE twice.
EDID	
EDID data is passed between Output 1 and Input 1	

Step 8: Set the number of input or output ports

After installing or removing a module you need to set the number of input and output ports so that the **VS-1616DN-MD** recognizes the new configuration.

To set the number of input or output ports:

1. Press ESC, ENTER and LOCK together. The following is displayed:

```
Configuration Device
```

2. Press ENTER. The following is displayed:

```
Test Board: 1  MaxInput:17  MaxOutput:17
```

Note: The number of input and output ports can only be set in units of two, for example, 4 x 4, 16 x 4 or 12 x 16.

3. Using the numeric keys, enter the number of input and output ports installed. The TAKE button flashes.
4. Press TAKE. The number of installed ports is saved and the display reverts to the output/input display.
5. Reboot the device by turning the power off and then on again.