RTBUS 12

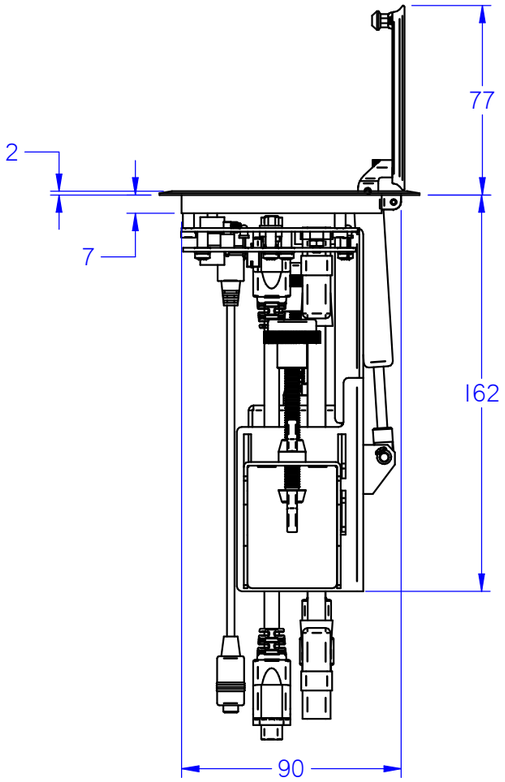

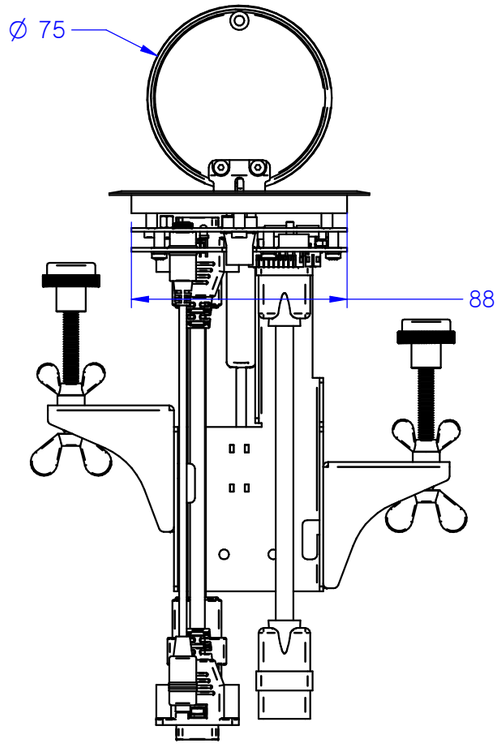

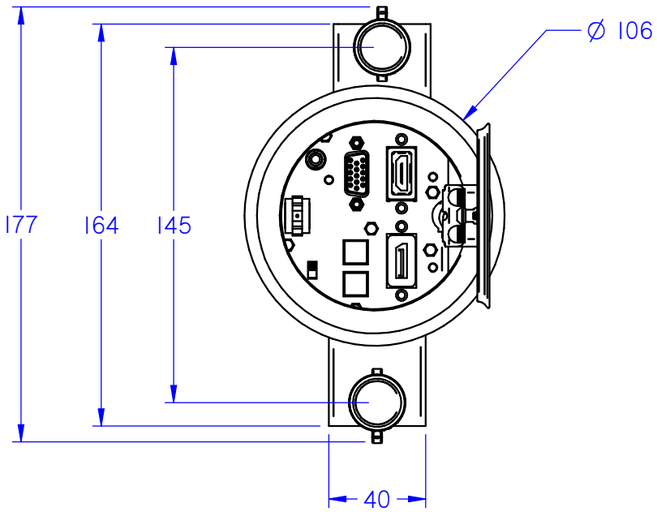

DIMENSIONS IN MILIMETER